SOI/SOS MOSFET Universal Compact SPICE Model with Account for Radiation Effects

Konstantin O. Petrosyants[1,2 *], Igor A. Kharitonov[1] and Lev M. Sambursky[1,2]
[1] National Research University Higher School of Economics, Moscow Institute of Electronics and Mathematics
[2] Institute for Design Problems in Microelectronics, Russian Academy of Sciences
Moscow, Russia, *e-mail: eande@miem.edu.ru

***Abstract*—Universal SPICE model for submicron SOI/SOS MOSFETs based on BSIMSOI and EKV-SOI platforms with account for total ionizing dose-induced effects (TID), pulsed radiation effects, single events is presented. A special subcircuit consisting of parasitic transistors for sidewall and backgate leakage currents and other elements is connected to the standard SPICE model. In addition, the radiation-dependent parameters are described by physically based mathematical equations. Model parameter extraction methodology is described. Examples of rad-hard SOI/SOS CMOS circuits simulation are presented.**

Keywords—SOI/SOS MOSFETs, compact SPICE models, radiation effects, total dose effects, single events, pulse effects, parameter extraction, simulation time, radiation-hardened circuit design

I. Introduction

SOI CMOS technology is a perspective platform for radiation-hardened ICs fabrication for various special applications: aerospace, energetic, nuclear and biomedicine research, military and other special electronics.

Simulation of radiation effects in ICs is generally performed using SPICE-based simulators. Unfortunately, standard compact MOSFET models implemented into commercial versions of SPICE simulators do not take into account radiation effects. Therefore, accurate and computationally efficient compact SOI/SOS MOSFET models taking into account radiation-induced total dose (TID), single events (SEE), and transient dose-rate effects (TRE) are necessary.

Over the last years, several works taking into account radiation effects in compact SOI MOSFET models were published. In [1] compact model TDESim for submicron SOI MOSFETs was proposed to account for radiation-induced sidewall static leakage currents in “bird’s beak” LOCOS corners. Paper [2] introduced a SOI MOSFET compact model with account for single events and total dose effects on threshold voltage and mobility. The model does not account for buried oxide radiation-induced effects and the corresponding leakage currents. Paper [3] presented a SOI n-MOSFET macromodel with simple polynomial-based account for threshold voltage, mobility, and sidewall leakage currents with varying body contact voltage.

However, in most publications, the parameter extraction procedure was not described sufficiently and calibration of electrical characteristics was not carried out completely. For these reasons, their application to design of RH ICs is limited.

In this work, a universal SPICE model based on BSIMSOI or EKV-SOI platform for submicron SOI/SOS MOSFETs with account for total ionizing dose induced effects (TID), pulsed radiation effects, single events is presented. Additional circuit elements and mathematical equations for radiation-dependent parameters are included in standard SPICE model to provide the sufficient accuracy in a wide range of electrical regimes and radiation conditions. The proposed model is supported by automated parameter extraction procedure. In comparison with the existing models, it provides engineers and designers with greater capabilities for radiation-hardened SOI/SOS CMOS circuit design.

II. The Model Description

A. Equivalent Circuit

The presented universal compact SPICE model for submicron SOI/SOS MOSFETs with account for total ionizing dose induced effects (TID), pulsed radiation effects, single events is essentially a macromodel (Fig. 1). In its core lie two models that present the main transistor M_{front} (front Si–SiO_2 interface) (see Fig. 1,*a*): the standard BSIMSOI or EKV-SOI specially developed for SOI substrate [10], [11]. The type of model is selected by a designer based on circuit particularities. In order to account for radiation effects, the core model is complemented with an additional subcircuit (Fig. 1,*b*). This subcircuit consists of parasitic transistors M_{botm} and M_{side} for the backgate and sidewall leakage currents in SOI MOSFET structure; current sources I_{PSI}, I_{PDI} that represent the currents induced by pulsed irradiation; current source I_{SEU} that represents the current induced by ion strike. For the case of SOS MOSFET, instead of parasitic transistor M_{botm} leakage current source I_{lsaph} and resistor R_{saph} are used.

Model parameters standing for threshold voltage, mobility, and subthreshold slope of the main M_{front} and parasitic transistors M_{side} and M_{botm} are radiation-dependent and are described with mathematical equations.

For today, BSIMSOI MOSFET model is widely used in practical works for SOI/SOS CMOS circuit design. This

This work was funded in part by Russian Foundation for Basic Research, project No. 14-29-09145.

model is popular but it is complex for practical applications, has a lot of parameters and is time-consuming.

In comparison with the BSIMSOI model, EKV-SOI is described by a fewer number of parameters to be extracted from measurement (see Table I) and spends less CPU time for SOI/SOS CMOS circuits simulations.

TABLE I. QUANTITY OF MACROMODEL PARAMETERS

Parameters group	BSIMSOI-RAD	EKV-RAD
1. Core model parameters (without account for radiation effects)	180	27
2. Additional parameters:		
• for binning	264	—
• for floating-body effects	—	8
• for parasitic components	32	32
3. Radiation-dependent parameters:		
• for the core model	10	4
• for parasitic components models	8	8
• factors for radiation-dependent parameters	36	24

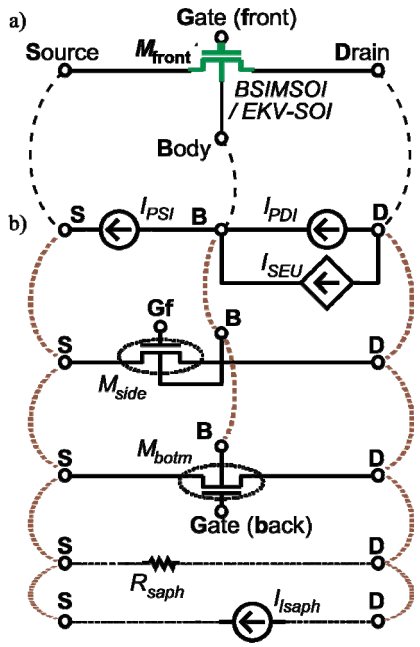

Fig. 1. Equivalent circuits of the BSIMSOI-RAD and EKV-RAD macromodels for SOI/SOS MOSFET: *a*—core front MOSFET M_{front} with radiation dependent parameters; *b*—subcircuit accounting for radiation-induced static and dynamic leakage currents

B. EKV-SOI Model

The equivalent circuit of the EKV-SOI macromodel taking into account floating-body effects is presented in Fig. 2.

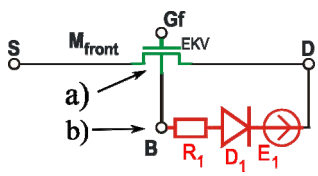

Fig. 2. Equivalent circuit of the EKV-SOI macromodel: *a*—core front MOSFET M_{front} with radiation dependent parameters; *b*—subcircuit accounting for floating body effects

The subcircuit R1—D1—E1 is introduced to account for this effect (Fig. 2,*b*). It creates the additional current I_{DB} from drain to body under the combined action of the drain and gate biases. D1 and R1 elements control the magnitude and steepness of the current rise; voltage source E1 controls the kink pinch-off voltage that is dependent on the gate bias:

$$V_{E1}(V_{GS}) = V_{dd} - \left(p_1 + p_2 \cdot V_{GS} + p_3 \cdot V_{GS}^2\right), \quad (1)$$

where factors p_1, p_2, p_3 are fitting coefficients (see Fig. 3).

C. Total-dose effects:

The threshold voltage V_{TH}, mobility μ, subthreshold slope S for the main transistor M_{front} and parasitic transistors M_{botm} and M_{side} are dependent on total dose D.

If model BSIMSOI is used as the core model, the threshold voltage is described by set of parameters *VTH0, K1, K2* etc., mobility is described by *U0*, *UA*, *UB* etc., subthreshold slope is described by *CIT* and *VOFF*.

If EKV-SOI is used, V_{TH}, μ, S are described by the set of parameters: *VTO, GAMMA, KP,* and *E0*.

All of the mentioned above parameters are dependent on total dose D and are expressed in the form $a_1 \cdot (1 - \exp[-a_2 \cdot D])$, where a_1, a_2 are fitting factors, or in the form of a polynomial.

D. Single events

Single events are accounted with the I_{SEU} current source (see Fig. 1,*b*) that can be described by the classical two-exponential function (Fig. 4,*a*) or a separate subcircuit (Fig. 4,*b*) that accounts for deposition of charge, recombination and drift of charge during collection and bipolar amplification [13].

E. Transient ionizing radiation effects

These effects are simulated by the traditional manner, using current sources I_{PDI}, I_{PSI} (see Fig. 1,*b*). Given that the analyzed MOFETs are situated on the insulating substrate and have thin active layer, transient photocurrents include only the prompt components and are described by the well-known equation:

$$I_{PDI} = q g_0 \gamma \cdot P_{col}(V_{DS}), \quad (2)$$

where g_0 is the generation rate in silicon = $4 \cdot 10^{13}$ (electron-hole pairs $rad^{-1}cm^{-3}$); γ is the dose rate (rad(Si)/s); $P_{col}(V_{DS})$ is the effective collection volume (cm^3) that is drain voltage V_{DS} dependent.

To account for parasitic bipolar transistor amplification, the current source is connected to transistor active area node.

III. MODEL PARAMETER EXTRACTION

Macromodel parameter extraction procedure with account for total dose effects is accomplished within the industry standard IC-CAP software suite with the help of a modified workflow [7], [8], [9]. Irradiated MOSFETs electrical characteristics data may come from real test structures measurements, or from device simulation with TCAD [10]. Composition of the model parameters extraction procedure

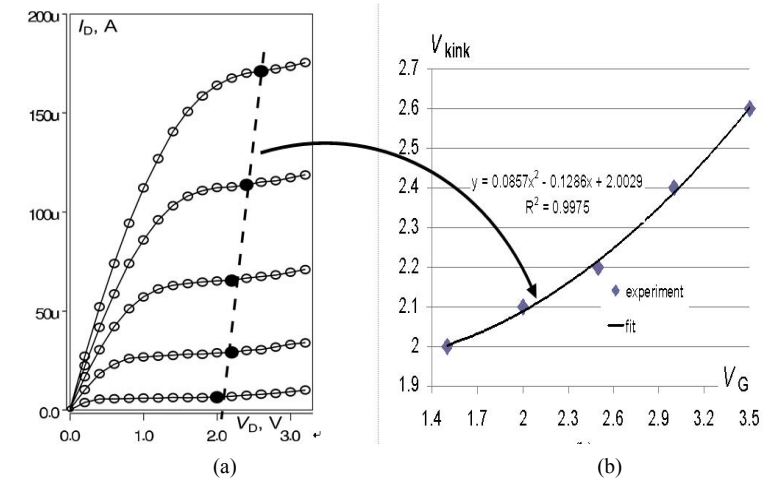

Fig. 3. Assessment of factors for $V_{EI}(V_{GS})$ dependency: experimental data [12] (a), fitting (b)

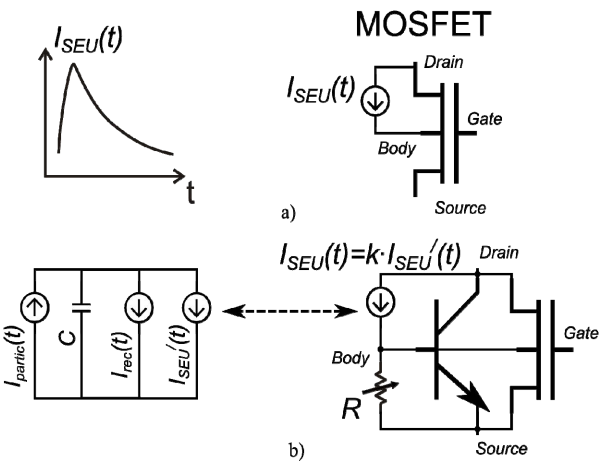

Fig. 4. SPICE-modeling of SEU in SOI MOSFET: a) simple model with double-exponential current source (a), improved model [13] with subcircuit connected to MOSFET (b)

based on test structures measurement with account for steady-state radiation is as follows:

1) The full set of model parameters is extracted for unirradiated devices.

2) Only radiation-dependent parameters are extracted for the parasitic transistors, then the core model, for a given set of radiation doses.

3) Experimental dependencies of model parameters on dose are approximated to a known physical function (see Fig. 6).

In order to separate leakage currents flowing through M_{botm} and M_{side}, special radiation-hard test transistor structures (H- or O- or R-type) are used.

Comparison of irradiated test SOI MOSFETs' I-V curves that were measured and simulated with the BSIMSOI-RAD macromodel is presented in Fig. 5. The gate size is $W / L = 8 / 0.25$ µm. Maximum simulation error is 5–7 % in the entire voltage and dose range. Degradation of several core front MOSFET model parameters with dose is depicted in Fig. 6.

IV. Examples of Circuit Design

The model was implemented in circuit simulators HSpice, Spectre, Eldo and others and extensively applied to simulation of radiation-hard digital, analog, and mixed-signal integrated SOI/SOS CMOS circuits. For example, in Fig. 7 timing diagrams for a 6T memory cell are presented for ion strikes with different LETs. In Fig. 8 frequency and transient responses for a rail-to-rail operational amplifier (35 MOSFETs) depending on total dose are presented. Modeling error is 10–15% for static and 15–20% for dynamic characteristics.

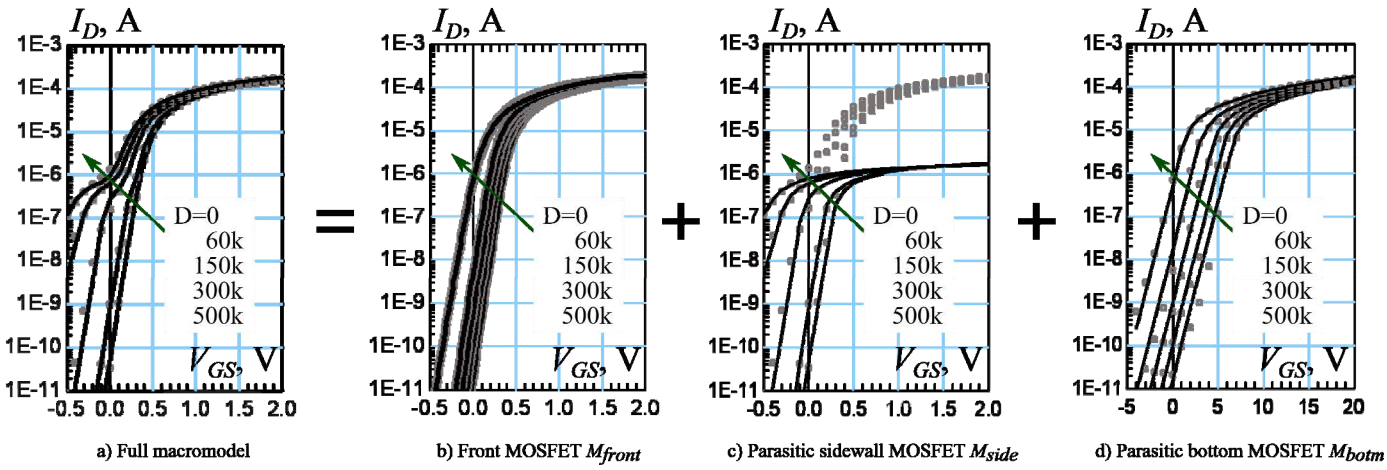

Fig. 5 Simulated (lines) and measured (circles) SOI MOSFET transfer I-V-curves ($W / L = 8 / 0.25$ µm)

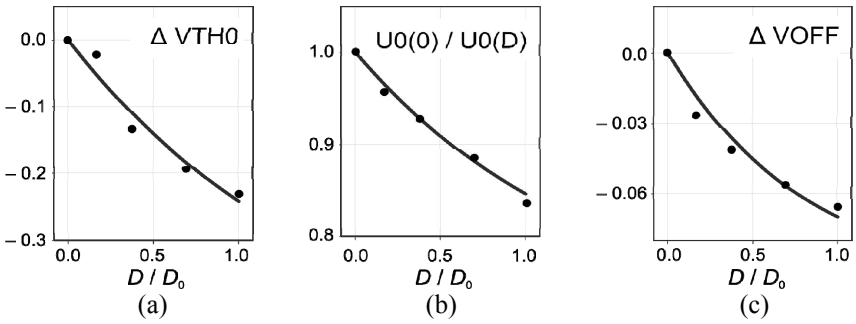

Fig. 6. Degradation of VTH0 (a), U0 (b), VOFF (c) parameters with dose for the core front MOSFET (M_{front} in Fig. 2,*a*)

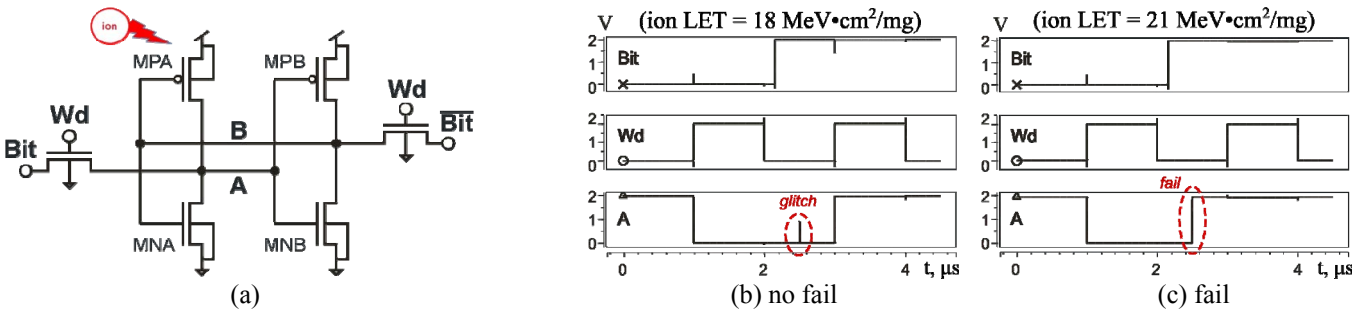

Fig. 7. SEU in a 6T memory cell (a): operation succeeded (b), operation failed (c)

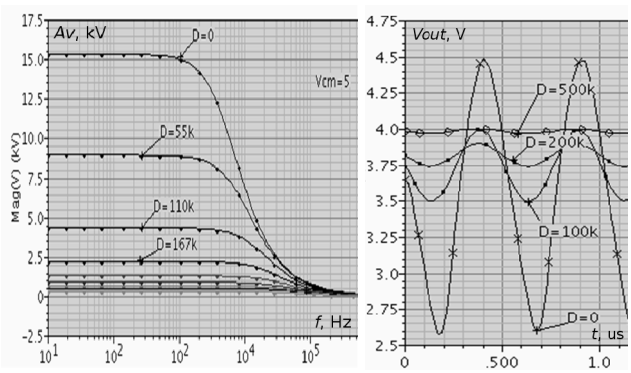

Fig. 8. OA A_v frequency (a) and V_{out} transient (b) responses

V. References

[1] Zebrev G. I., Gorbunov M. S., "Modeling of radiation-induced leakage and low dose-rate effects in thick edge isolation of modern MOSFETs," *IEEE Trans. Nuclear Science*, 2009, vol. 56, no. 4, pp. 2230-2236.

[2] J. Alvarado, E. Boufouss, V. Kilchytska, D. Flandre, "Compact model for single event transients and total dose effects at high temperatures for partially depleted SOI MOSFETs," *Microelectronics Reliability*, 2010 vol. 50, pp. 1852–1856.

[3] Huang, X., Francis, A. M., Lostetter, A. B., Mantooth, H. A., "Compact modeling of environmentally induced radiation effects on electrical devices," *Proc. Aerospace Conference*, 2004, vol. 4, pp. 2597-2607.

[4] E. O. Mikkola, B. Vermeire, H. G. Parks, R. Graves, "VHDL-AMS Modeling of Total Ionizing Dose Radiation Effects on CMOS Mixed Signal Circuits," *IEEE Trans. Nuclear Science*, 2007, vol. 54, no. 4, pp. 929–934;

[5] D. Fulkerson, D. Nelson, R. Carlson, and E. Vogt, "Modeling ion-induced pulses in radiation-hard SOI integrated circuits," *IEEE Trans. Nuclear Science*, Aug. 2007, vol. 54, no. 4, pp. 1406-1415.

[6] L. Li, W. Zhou, H. Liu, "Proton induced single event upset cross section prediction for 0.15 µm six-transistor (6T) silicon-on-insulator static random access memories," *J. Nuclear Science and Technology*, 2012, vol. 49, no. 4, pp. 450-456.

[7] K. O. Petrosyants, I. A. Kharitonov, E. V. Orekhov, L. M. Sambursky, A. P. Yatmanov, "Simulation of Radiation Effects in SOI CMOS Circuits with BSIMSOI-RAD macromodel," in *Proc. 7th IEEE East-West Design & Test Int. Symp. (EWDTS)*, Moscow, Russia, 2009, pp. 243–246.

[8] I. A. Kharitonov, "Multi-level methodology for CMOS SOI/SOS MOSFET parameterization for IC radiation hardness simulation with SPICE," *Proc. 8th IEEE EWDTS Symposium*, 2010, pp. 358–361.

[9] K. O. Petrosyants, L. M. Sambursky, I. A. Kharitonov, A. P. Yatmanov, "SOI/SOS MOSFET compact macromodel taking into account radiation effects," *Russian Microelectronics,* vol. 40, issue 7, pp. 457-462, Dec. 2011.

[10] K. O. Petrosyants, I. A. Kharitonov, L. M. Sambursky, "Hardware-Software Subsystem for MOSFETs Characteristic Measurement and Parameter Extraction with Account for Radiation Effects," *Advanced Materials Research*, vol. 718-720, pp. 750-755, Mar. 2013.

[11] K. O. Petrosyants, I. A. Kharitonov, L. M. Sambursky, V. N. Bogatyrev, Z. M. Povarnitcyna, E. S. Drozdenko, "Simulation of total dose influence on analog-digital SOI/SOS CMOS circuits with EKV-RAD macromodel," in *Proc. 10th IEEE East-West Design & Test Int. Symp. (EWDTS)*, Kharkov, Ukraine, 2012, pp. 60–65.

[12] E. Culurciello, Silicon-on-Sapphire Circuits and Systems. Sensor and Biosensor Interfaces, McGraw-Hill, 2010.

[13] J. S. Kauppila, A. L. Sternberg, M. L. Alles, et al., "A bias_dependent single_event compact model implemented into BSIM4 and a 90 nm CMOS Process Design Kit," *IEEE Trans. Nucl. Sci.*, vol. 56, no. 6, pp. 3152–3157, Dec. 2009.